Indoor Antenna with Auxiliary Switch

OWNER'S MANUAL — Please read before using this equipment.

Your RadioShack Indoor Antenna provides excellent reception of VHF and UHF TV channels in most viewing locations. The auxiliary switch lets you quickly switch between antenna, satellite, or cable feed to receive VHF and UHF broadcasts or attach a video game to your TV.

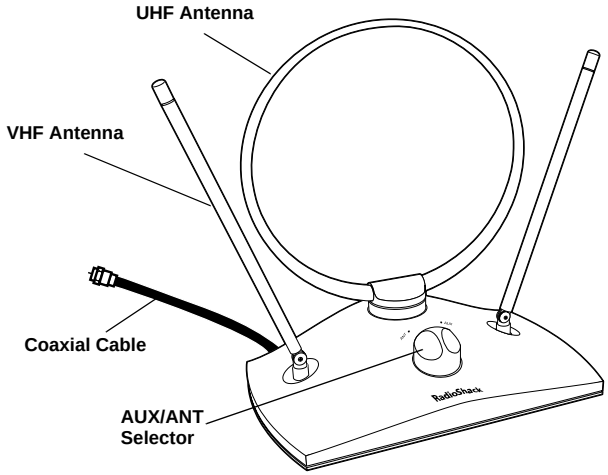

SELECTING A LOCATION

Locate the antenna in an area that is near your TV, cable connection, satellite receiver, or video game adapter. Experiment to find the location that provides the best reception for your equipment.

Note: Do not place your antenna near large metal objects or appliances that would create interference.

CONNECTING THE ANTENNA

Television

Connect the **TO TV** coaxial cable on the back of the antenna to the F-connector VHF/UHF input on your TV or satellite receiver.

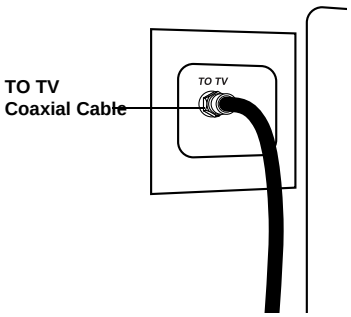

If your TV has separate screw terminals for VHF/UHF connections, connect a 75-to-300 ohm transformer between the coaxial cable and the VHF/UHF terminals.

If your TV has a 75-ohm VHF connector and a 300-ohm UHF connector, connect a signal splitter between the coaxial cable and the TV's VHF/UHF connector.

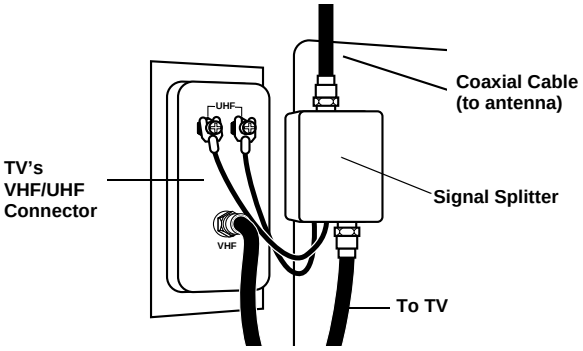

Satellite, Cable TV and Video Games

Connect the coaxial cable from your satellite, cable TV or video game adapter to **AUX IN** on the back of the antenna. To avoid interference, make sure the cable connection is tight.

OPERATION

UHF/VHF

1. Set **ANT/AUX** to **ANT**.
2. Turn on your TV and tune to the desired station.
3. Adjust the antenna rods and loop for the best reception.

Satellite, Cable TV or Video Games

1. Connect an **AUX** source to the **AUX IN** input on the back of the antenna.
2. Set **ANT/AUX** to **AUX**.

Notes:

- Late model TVs have on-screen menu controls for viewing VHF/UHF off-air or cable broadcasts. Ensure this menu control is at the proper off-air position.
- Do not bend the antenna rods or loop.

SPECIFICATIONS:

Antenna Rods (Dipoles) ..... $39^{3}/_{4}$ in extended

Operating Bandwidth
- VHF ..... 54 MHz–216 MHz (Channels 2–13)
- UHF ..... 470 MHz–806 MHz (Channels 14–69)
- AUX ..... 50 MHz–1000 MHz

RadioShack®
www.radioshack.com℠

© 2001 RadioShack Corporation.
All Rights Reserved.
RadioShack and RadioShack.com are trademarks used by RadioShack Corporation.

Limited Ninety-Day Warranty

This product is warranted by RadioShack against manufacturing defects in material and workmanship under normal use for ninety (90) days from the date of purchase from RadioShack company-owned stores and authorized RadioShack franchisees and dealers. EXCEPT AS PROVIDED HEREIN, RadioShack MAKES NO EXPRESS WARRANTIES AND ANY IMPLIED WARRANTIES, INCLUDING THOSE OF MERCHANTABILITY AND FITNESS FOR A PARTICULAR PURPOSE, ARE LIMITED IN DURATION TO THE DURATION OF THE WRITTEN LIMITED WARRANTIES CONTAINED HEREIN. EXCEPT AS PROVIDED HEREIN, RadioShack SHALL HAVE NO LIABILITY OR RESPONSIBILITY TO CUSTOMER OR ANY OTHER PERSON OR ENTITY WITH RESPECT TO ANY LIABILITY, LOSS OR DAMAGE CAUSED DIRECTLY OR INDIRECTLY BY USE OR PERFORMANCE OF THE PRODUCT OR ARISING OUT OF ANY BREACH OF THIS WARRANTY, INCLUDING, BUT NOT LIMITED TO, ANY DAMAGES RESULTING FROM INCONVENIENCE, LOSS OF TIME, DATA, PROPERTY, REVENUE, OR PROFIT OR ANY INDIRECT, SPECIAL, INCIDENTAL, OR CONSEQUENTIAL DAMAGES, EVEN IF RadioShack HAS BEEN ADVISED OF THE POSSIBILITY OF SUCH DAMAGES.

Some states do not allow limitations on how long an implied warranty lasts or the exclusion or limitation of incidental or consequential damages, so the above limitations or exclusions may not apply to you.

In the event of a product defect during the warranty period, take the product and the RadioShack sales receipt as proof of purchase date to any RadioShack store. RadioShack will, at its option, unless otherwise provided by law: (a) correct the defect by product repair without charge for parts and labor; (b) replace the product with one of the same or similar design; or (c) refund the purchase price. All replaced parts and products, and products on which a refund is made, become the property of RadioShack. New or reconditioned parts and products may be used in the performance of warranty service. Repaired or replaced parts and products are warranted for the remainder of the original warranty period. You will be charged for repair or replacement of the product made after the expiration of the warranty period.

This warranty does not cover: (a) damage or failure caused by or attributable to acts of God, abuse, accident, misuse, improper or abnormal usage, failure to follow instructions, improper installation or maintenance, alteration, lightning or other incidence of excess voltage or current; (b) any repairs other than those provided by a RadioShack Authorized Service Facility; (c) consumables such as fuses or batteries; (d) cosmetic damage; (e) transportation, shipping or insurance costs; or (f) costs of product removal, installation, set-up service adjustment or reinstallation.

This warranty gives you specific legal rights, and you may also have other rights which vary from state to state.

RadioShack Customer Relations, 200 Taylor Street, 6th Floor, Fort Worth, TX 76102

We Service What We Sell *12/99*

RadioShack Corporation
Fort Worth, Texas 76102

15-1852
01A01
Printed in China